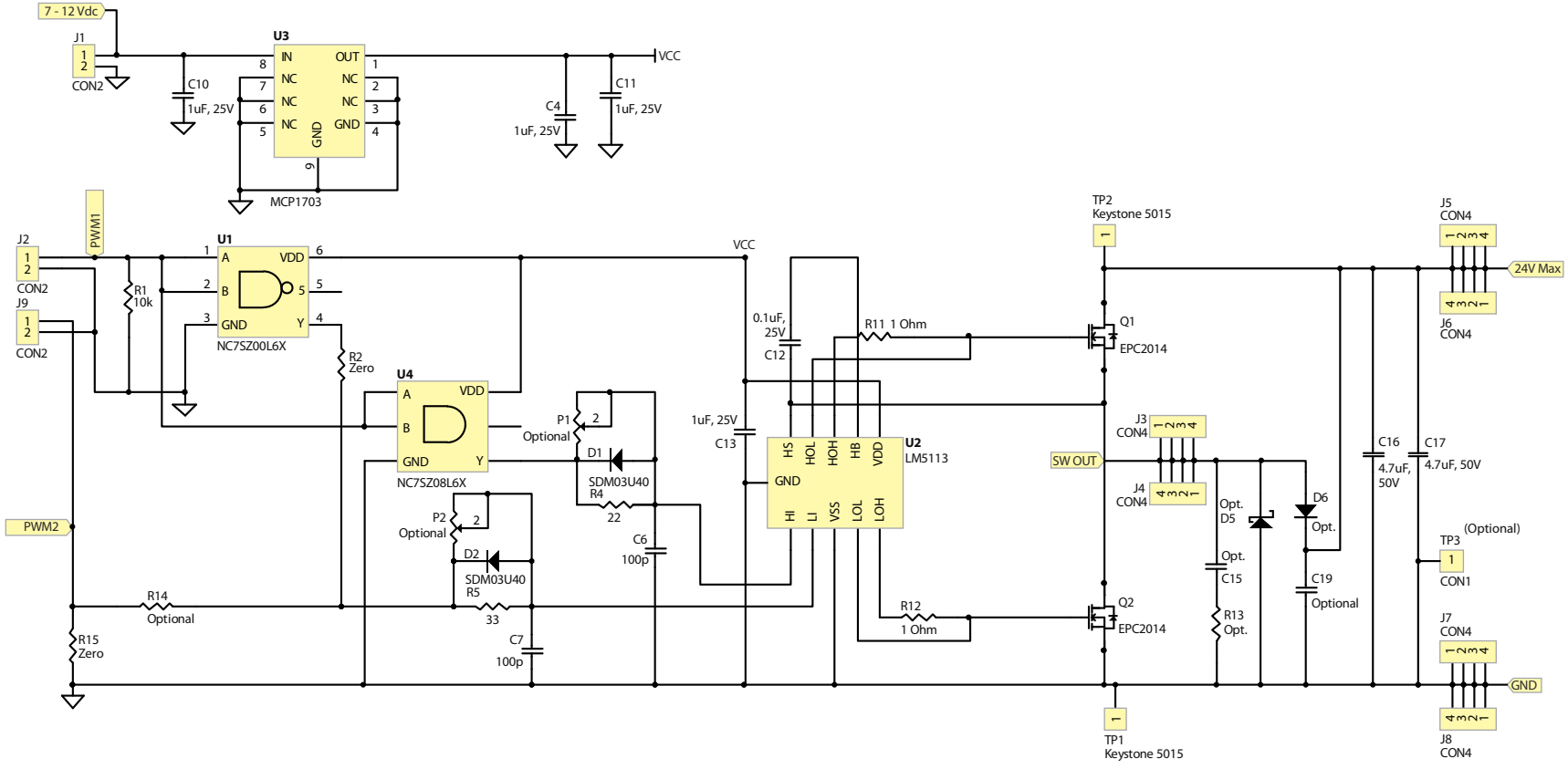

40V Half-Bridge with Gate Drive, using EPC2014

Rev 2.0