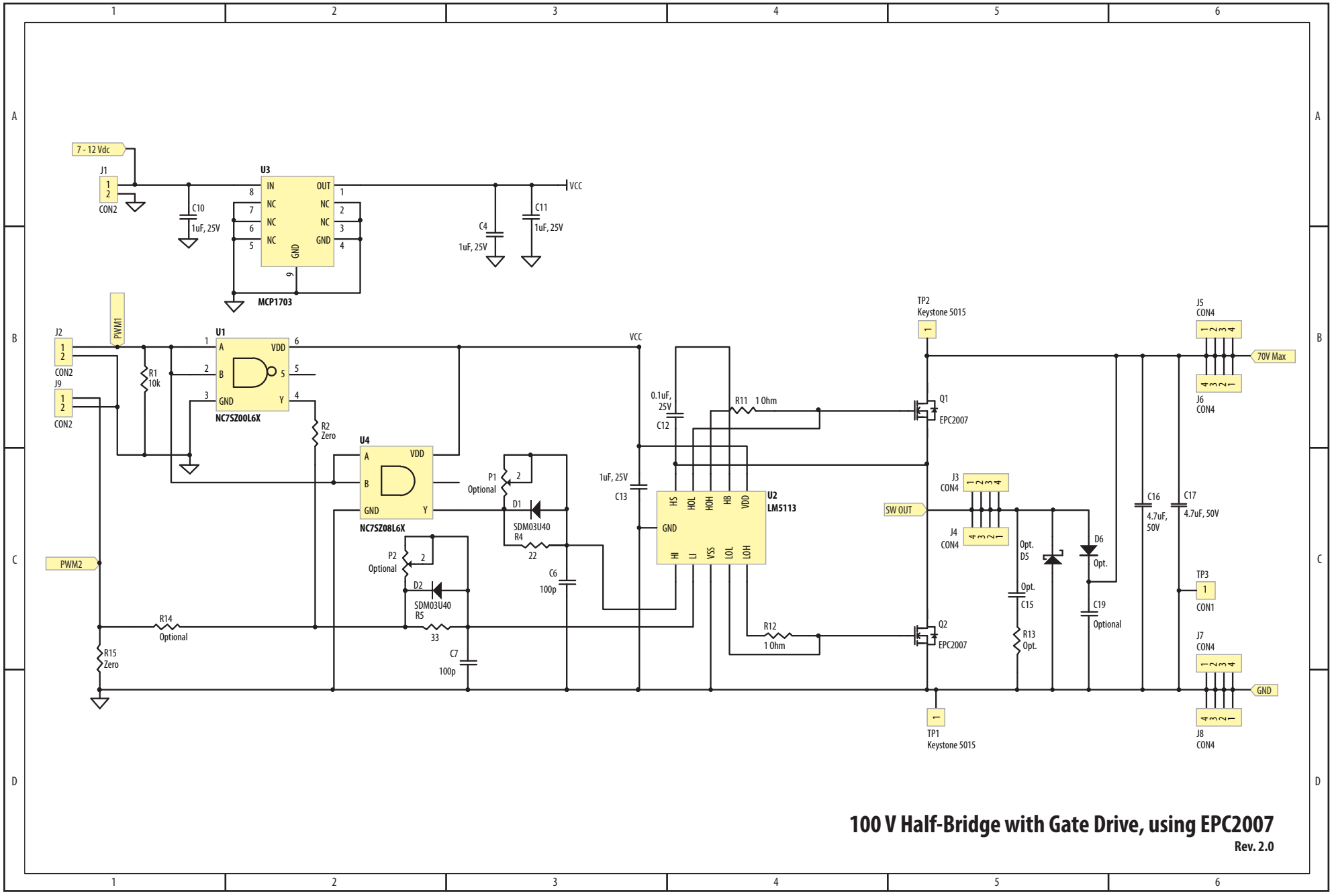

100 V Half-Bridge with Gate Drive, using EPC2007

Rev. 2.0