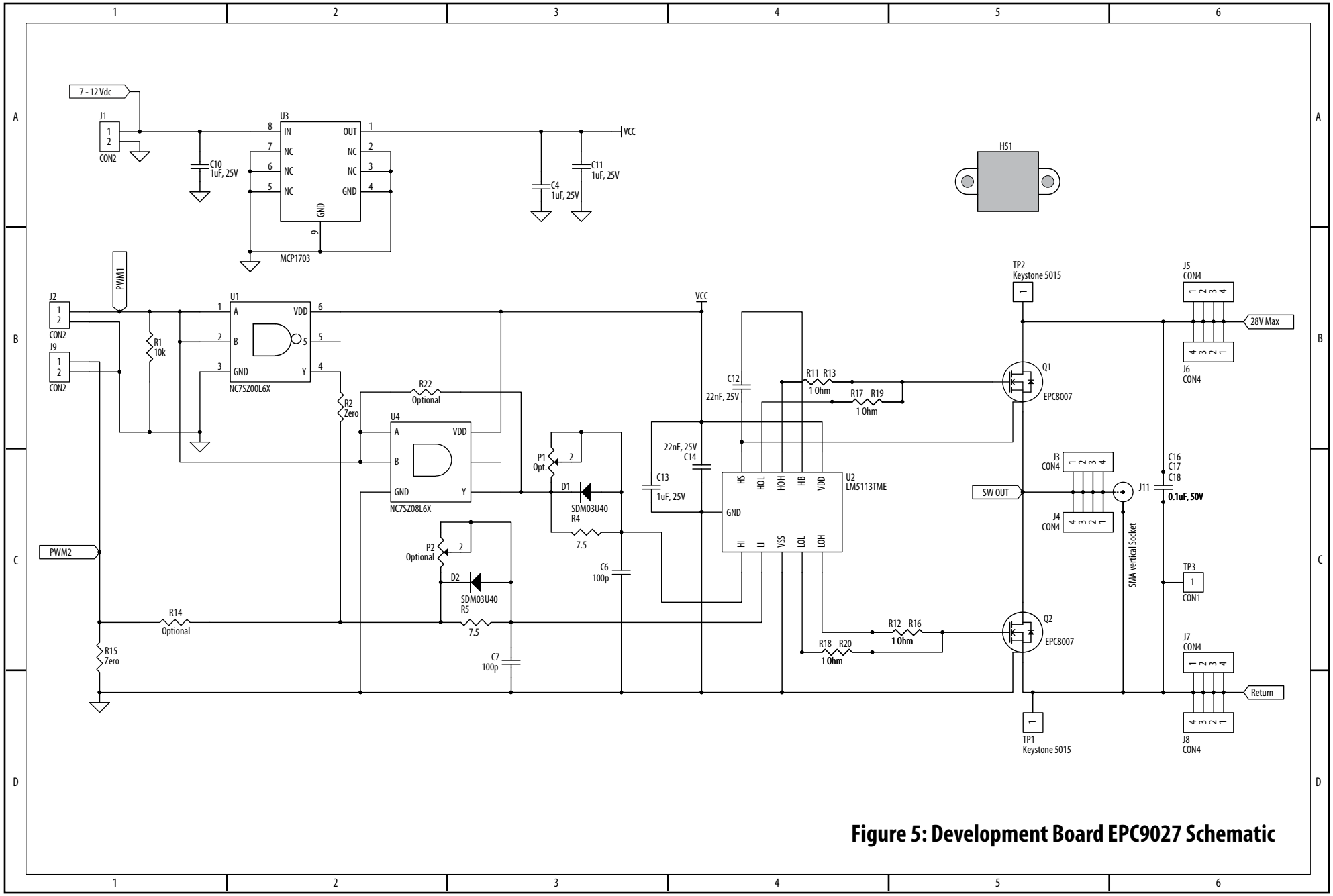

Figure 5: Development Board EPC9027 Schematic