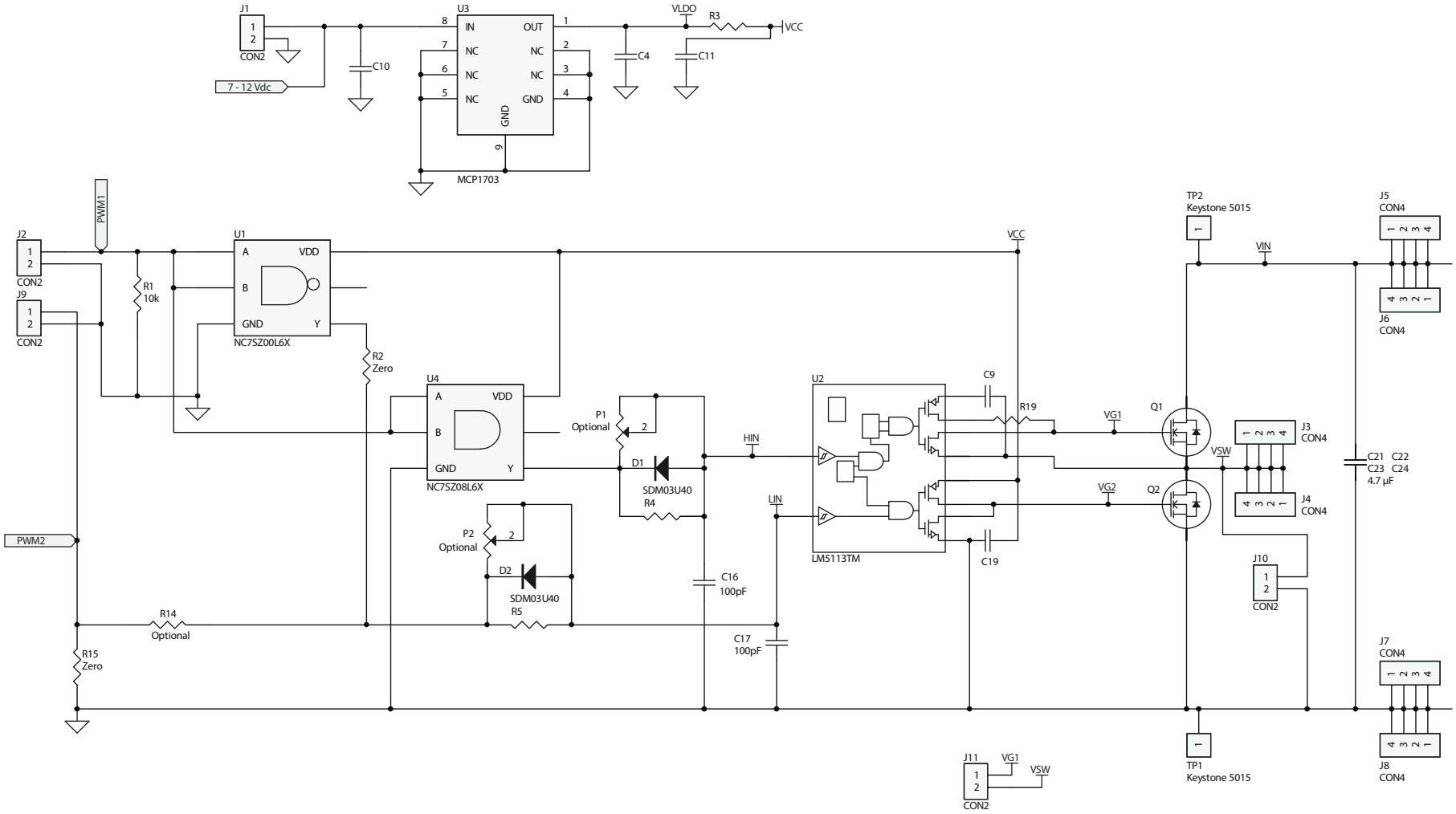

Figure 4: EPC9085 - Schematic