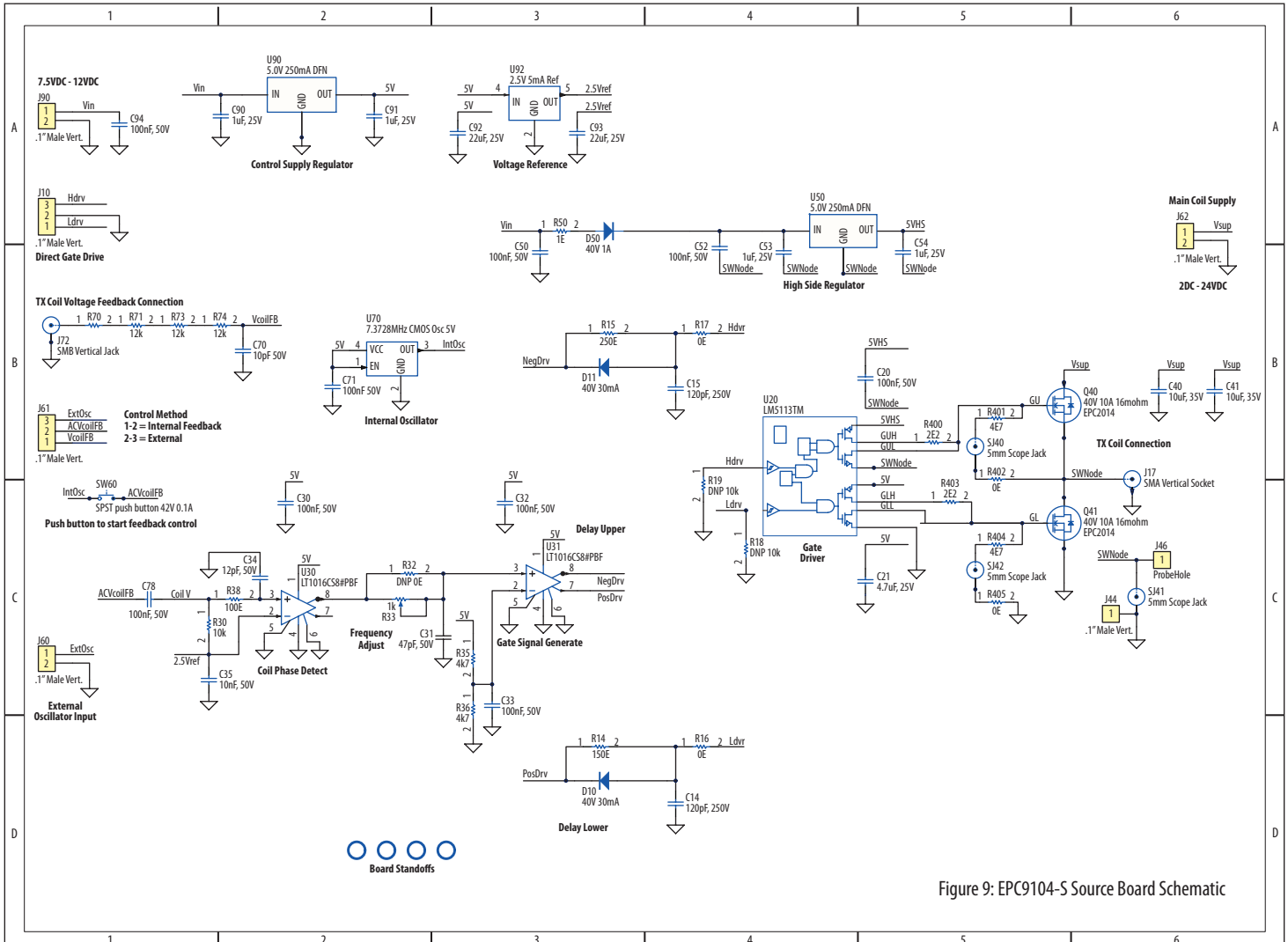

Figure 9: EPC9104-S Source Board Schematic
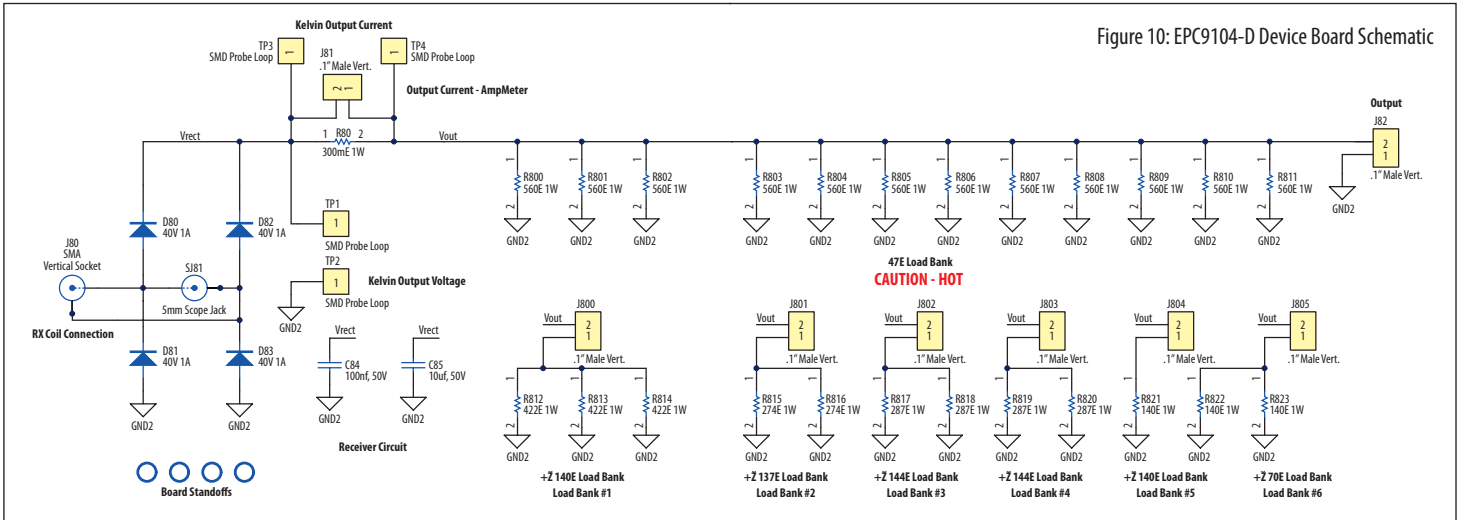
Figure 10: EPC9104-D Device Board Schematic