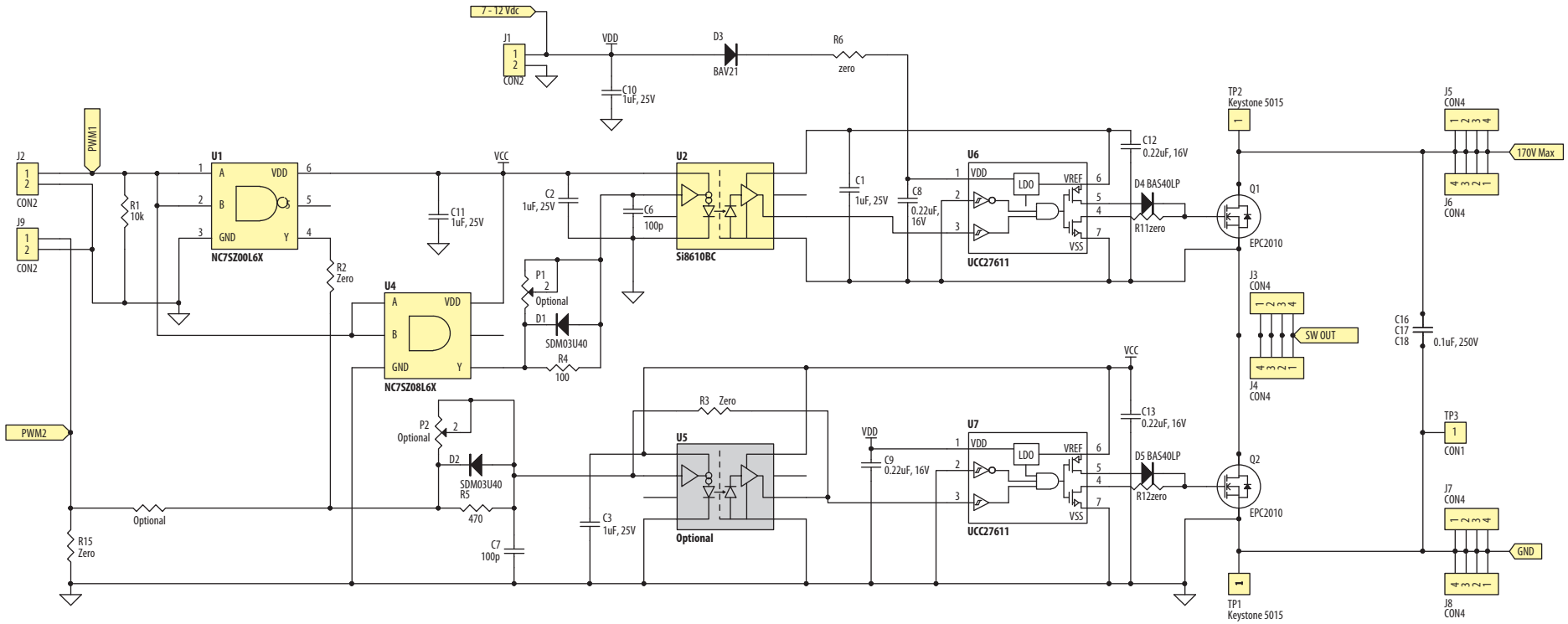

200V Half-Bridge with Gate Drive, using EPC2010

Rev 3.0