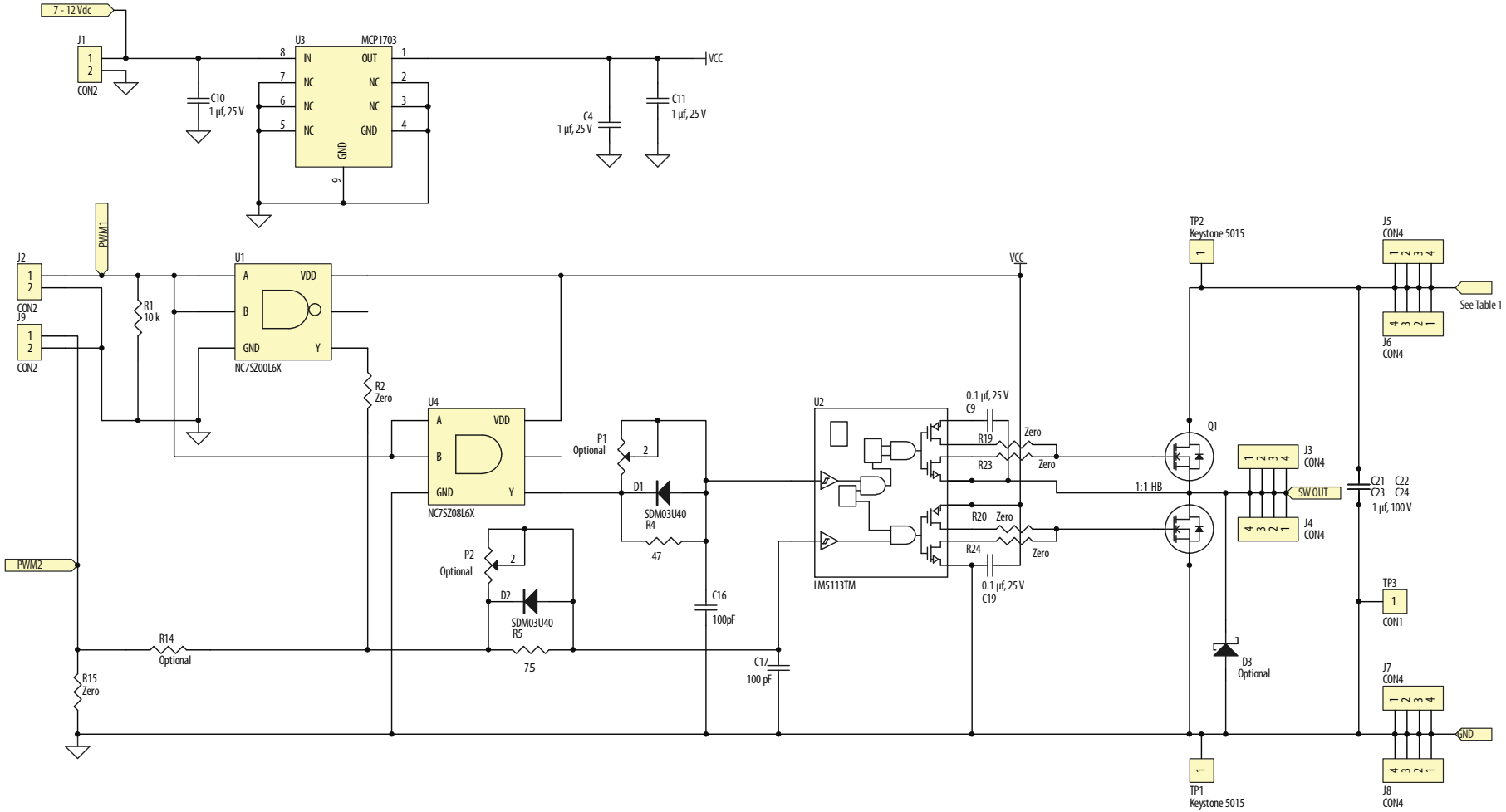

Figure 4: EPC9039 Development Board Schematic