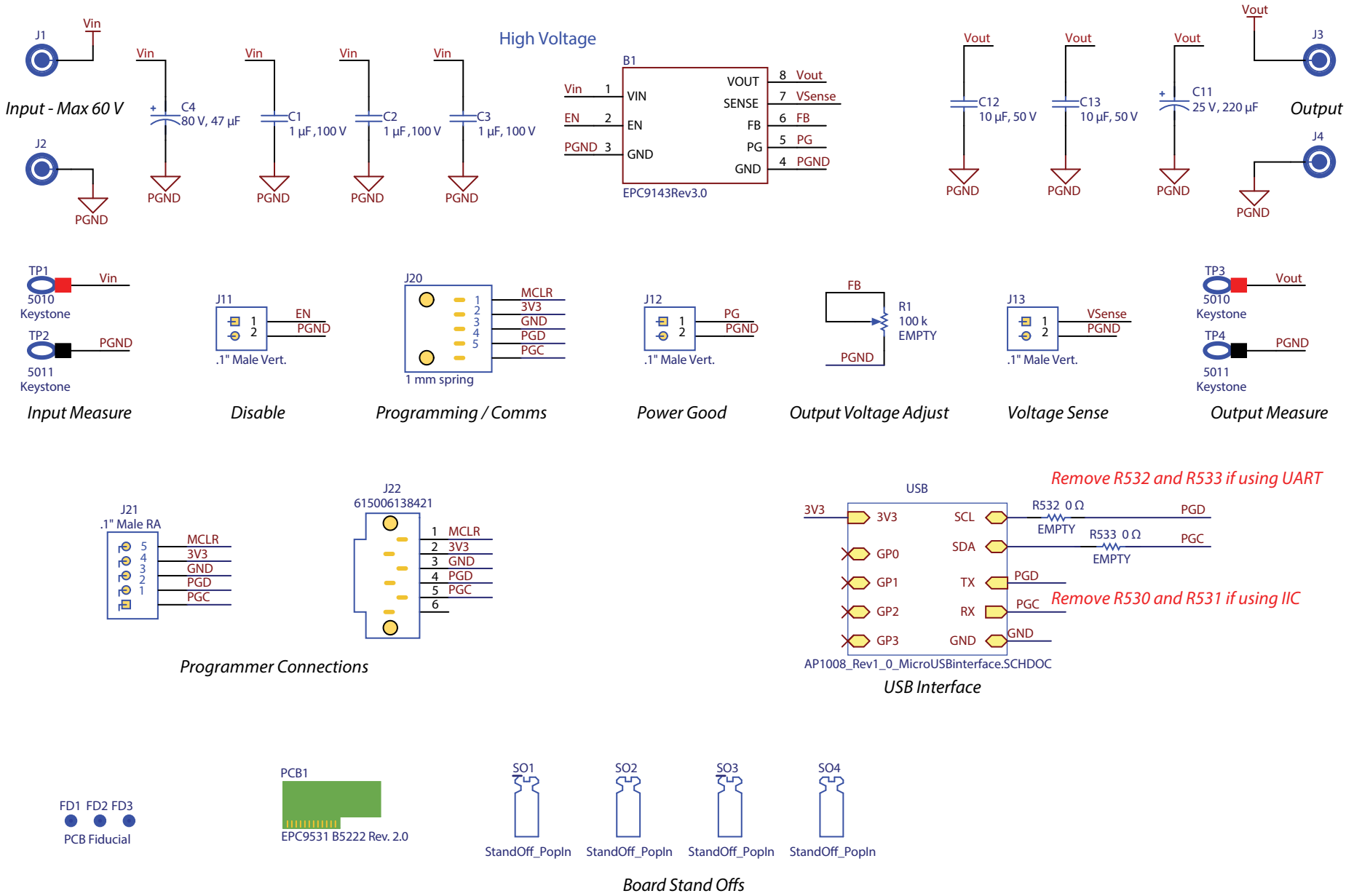

Figure 7: EPC9531 Controller schematic

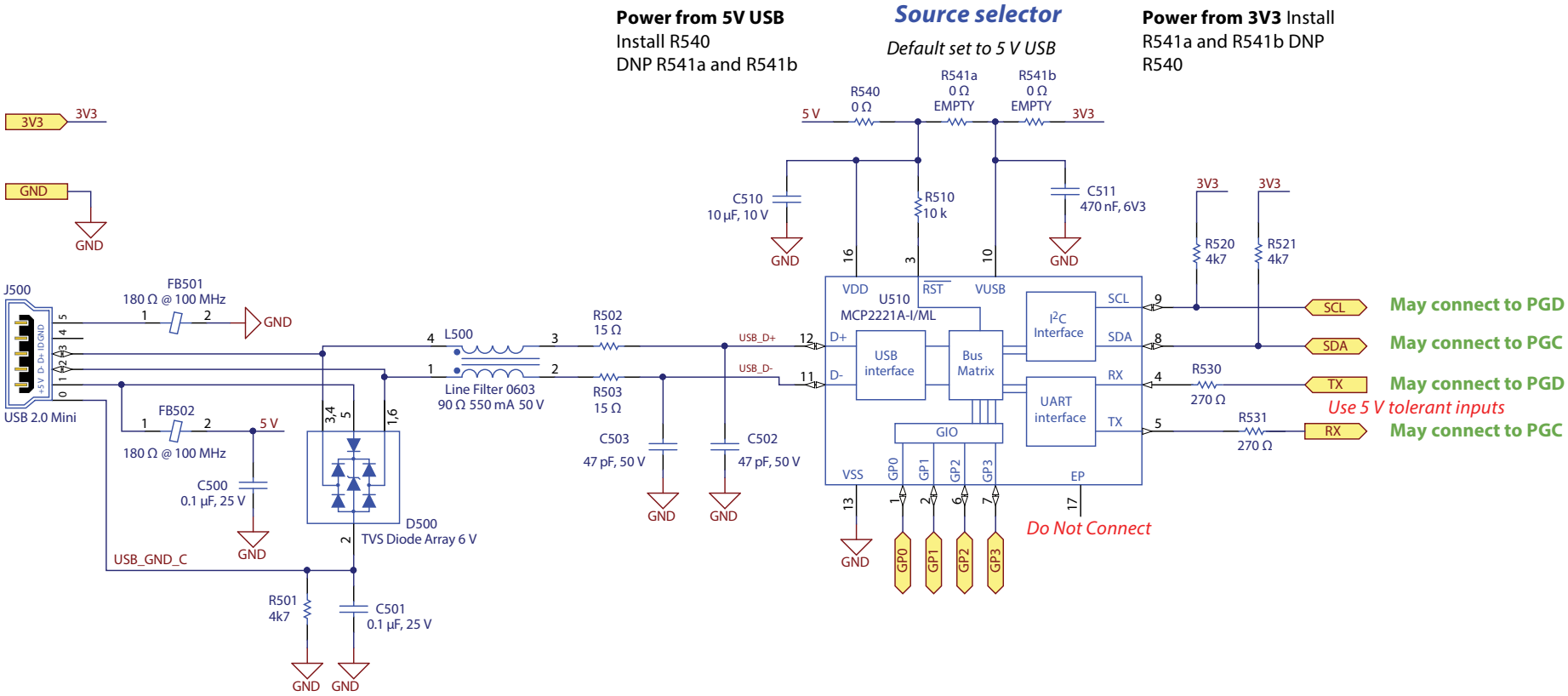

Figure 8: EPC9531 Controller schematic