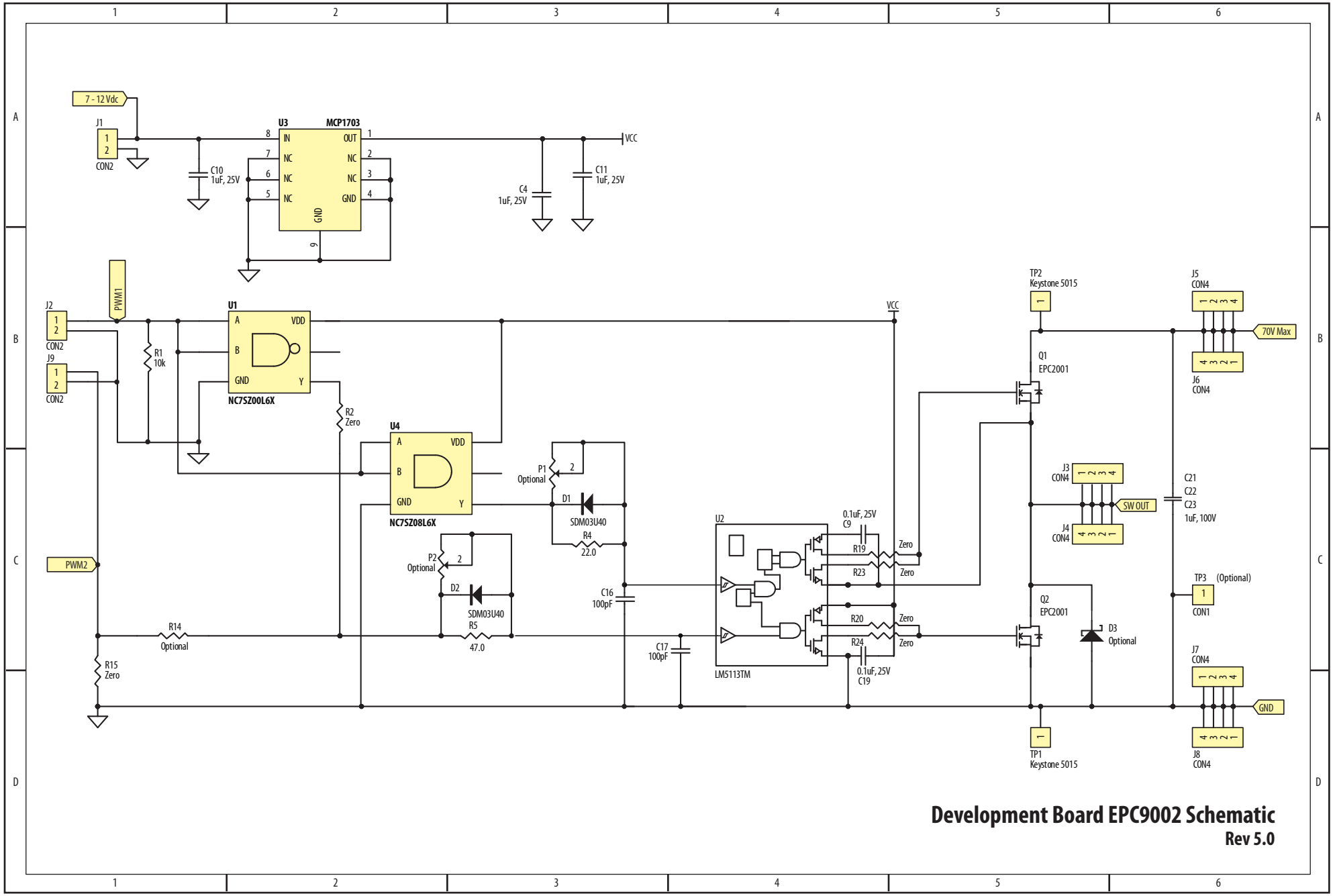

Development Board EPC9002 Schematic

Rev 5.0