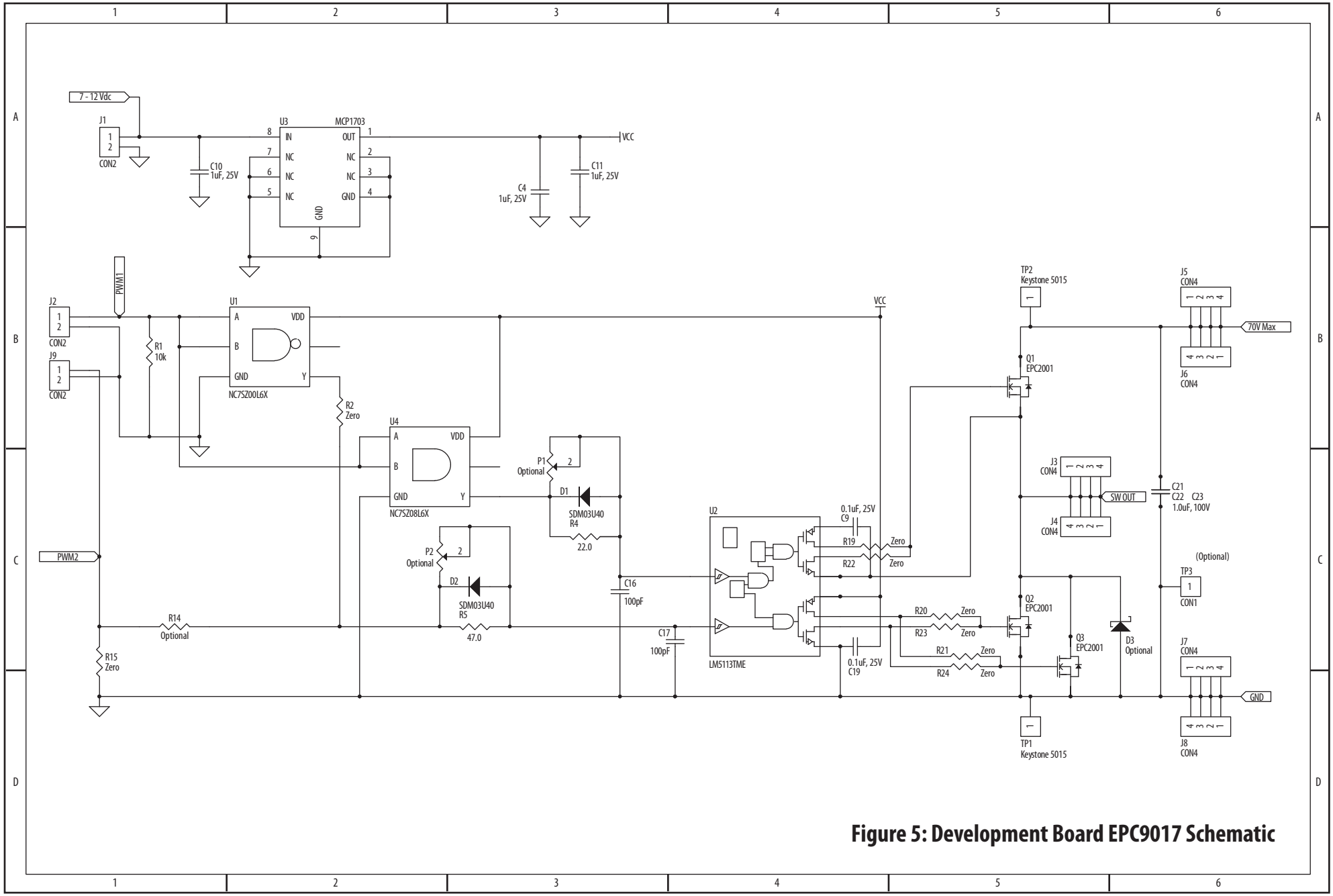

Figure 5: Development Board EPC9017 Schematic