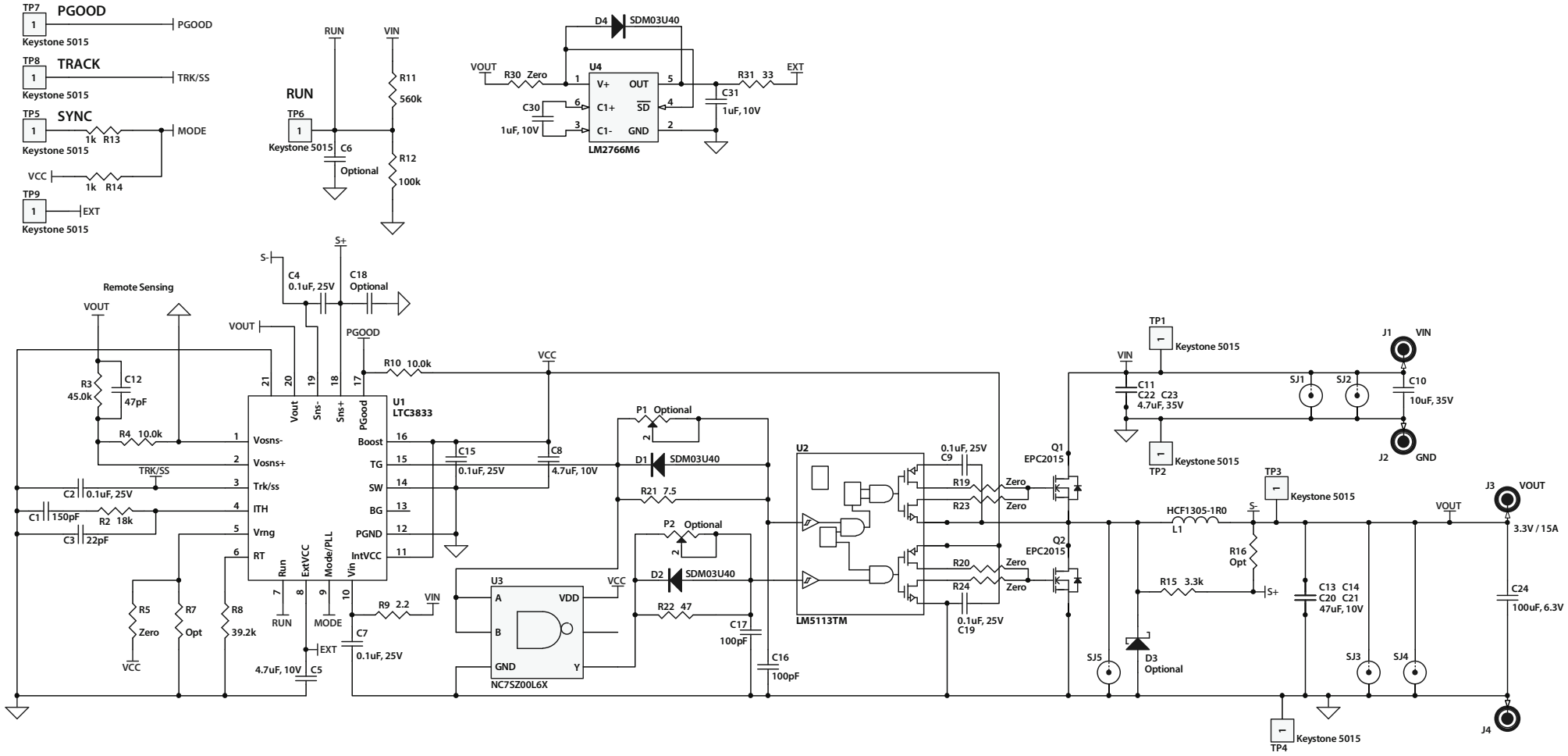

Demonstration Board – EPC9107 Schematic

Rev. 1.0